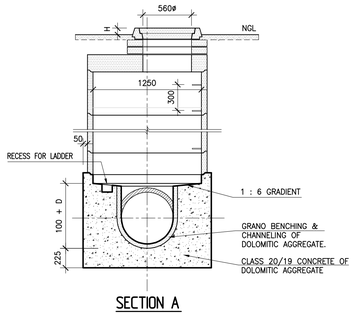

SECTION A
SCALE 1:30

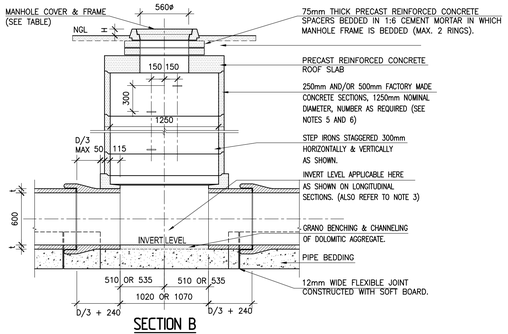

SECTION B
SCALE 1:30

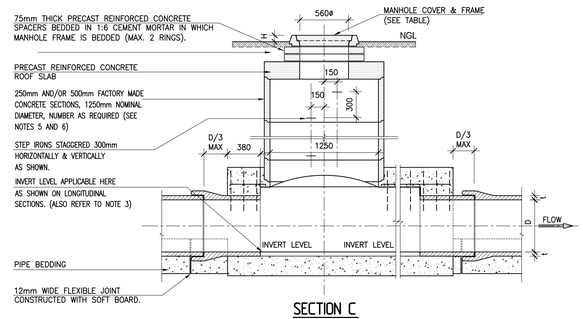

SECTION C
SCALE 1:30

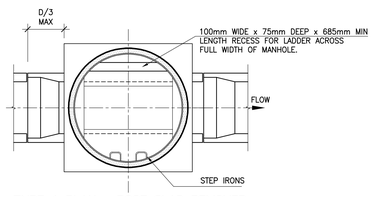

TYPE 1: PLAN - ROOF SLAB REMOVED
SCALE 1:30

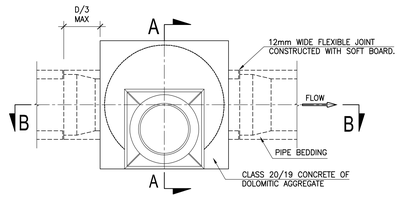

TYPE 1: PLAN - SHOWING MANHOLE COVER & FRAME
SCALE 1:30

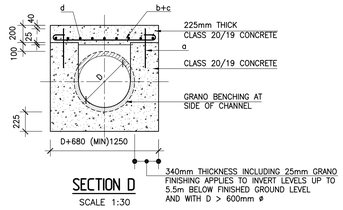

SECTION D
SCALE 1:30

DESCRIPTION OF REINFORCING (SECTION C & D)

a = 20mm Ø BARS x 450mm LONG @ 150mm c/c PLACED VERTICALLY.
b = 12mm Ø BARS @ 150mm c/c BENT AS SHOWN IN SECTION D.
c = 12mm Ø BARS @ 75mm c/c.
d = 12mm Ø DISTRIBUTION BARS @ 150mm c/c.

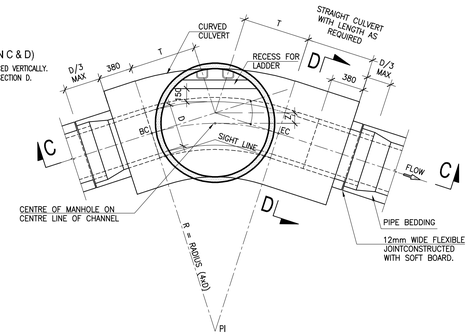

TYPE 1: TYPICAL SETTING OUT DETAIL -ROOF SLAB REMOVED
SCALE 1:30
(NOTE : ENGINEER TO PROVIDE DIMENSIONS)

MANHOLE TYPE 1

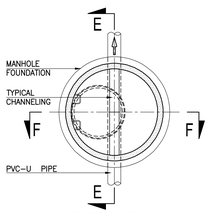

TYPE 2: PLAN
(TYPICAL EXAMPLE OF THROUGH CONNECTION IN MANHOLE)
SCALE 1:25

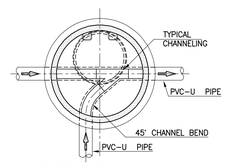

TYPE 2: PLAN
(TYPICAL EXAMPLE OF 90° CONNECTION IN MANHOLE)
SCALE 1:25

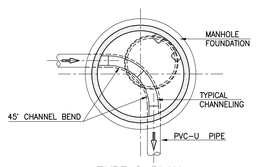

TYPE 2: PLAN
(TYPICAL EXAMPLE OF 90° BEND IN MANHOLE)
SCALE 1:25

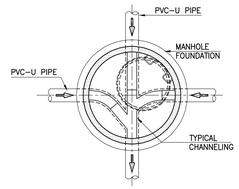

TYPE 2: PLAN
(TYPICAL EXAMPLE OF SIDE CONNECTIONS IN MANHOLE)
SCALE 1:25

TYPICAL MANHOLE LAYOUTS SHOWING POSITIONS OF MANHOLE FRAME, STEPS AND CHANNELING

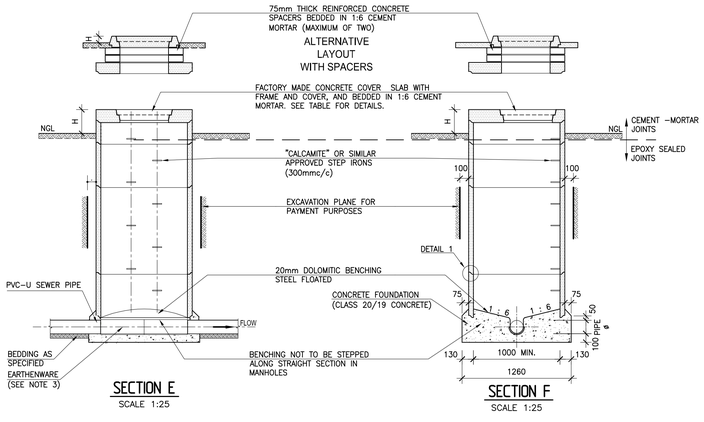

SECTION E
SCALE 1:25

SECTION F
SCALE 1:25

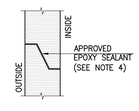

DETAIL 1
N.T.S

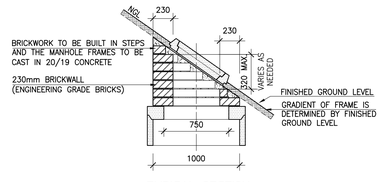

TYPICAL SECTION
BUILT IN MANHOLE FRAME AT FINISHED SLOPED SIDEWALKS
SCALE 1:25
(WITH WRITTEN PERMISSION FROM THE ENGINEER ONLY)

MANHOLE TYPE 2

APPLICATION OF MANHOLE DETAIL

DETAIL TYPE	APPLICATION
TYPE 1	FOR SEWERS LARGER THAN 300mm NOMINAL DIAMETER
TYPE 2	FOR SEWERS UP TO 300mm NOMINAL DIAMETER

MANHOLE COVERS AND FRAMES (SANS 558)

POSITION OF MANHOLE	TYPE OF COVER
CARRIAGE WAY	TYPE 2A CAST IRON FRAME AND COVER
STREET RESERVE	TYPE 4 CAST IRON OR CONCRETE FRAME AND CONCRETE COVER
ERVEN	TYPE 4 CAST IRON OR CONCRETE FRAME AND CONCRETE COVER
GENERAL	ONLY TYPE 2A MANHOLE COVERS MAY BE USED FOR SEWERS 300mmø AND GREATER

NOTE : CI COVERS ARE USED ONLY WITH WRITTEN INSTRUCTION FROM THE ENGINEER.

NOTES:

1. CONCRETE FOR MANHOLES MUST BE OF DOLOMITIC ORIGIN.
2. TYPICAL VALUES FOR H
   H = 50 – 75mm WITHIN ERVEN AND ROAD RESERVES
   = 250mm LOW COST HOUSING AND UNDEFINED ROADWAYS
   = 500mm OPEN VELD OR ROAD RESERVE WHERE POSITION OF MANHOLES CAN BE CONCEALED BY LONG GRASS OR OTHER GROWTH
3. CHANNELING : NOMINAL DIAMETERS.
   ø ≤ 300mm CLAY OR DOLOMITIC CONCRETE OR NUTEC CEMENT.
   ø > 300mm INSITU CAST DOLOMITIC CONCRETE
4. CONCRETE MANHOLE SECTIONS MUST BE FIXED WITH AN EPOXY SEALER SUCH AS EPIDERMIX 344 OR PRO–STRUCT 687 OR SIMILAR APPROVED.
5. FACTORY MADE MANHOLE SECTIONS MUST BE IN ACCORDANCE WITH SANS 1294.
6. MANHOLE FRAMES MAY ONLY BE BUILT IN ON SLOPED FINISHED SIDEWALKS ON A WRITTEN INSTRUCTION BY THE ENGINEER
7. OVER EXCAVATION MAY ONLY BE FILLED AFTER APPROVAL BY THE ENGINEER WITH GRADE 20/19 CONCRETE OR SUITABLE MATERIAL AS DIRECTED BY THE ENGINEER.
8. NO PART OF THE MANHOLE MAY BE FINISHED OFF WITH CEMENT–WASH OR MORTAR.

Notes:

MUNICIPAL CONNECTION

1. CONTRACTOR SHALL CONFIRM THE ACTUAL MUNICIPAL CONNECTION WITH THE ENGINEER AND THE MUNICIPALITY.

FOR TENDER
ORIGINAL IN RED
ORIGINAL
SIGNED: DATE: 07/08/2023

REFERENCE DRAWINGS

Dwg. No.	Description

Copyright vests in the Department of Eastern Cape Department of Education

AS-BUILT DRAWINGS
certified as-built drawings as per Centralised Drawing Archive AS-BUILT DRAWING REQUIREMENTS
Name:
Date:
Professional Registration No.:

No.	DATE	AMENDMENT	Rev By
T	07-08-2023	ISSUED FOR TENDER	EMC

Cad File Name
C304-001-SEWER MANHOLE DETAILS.dwg

Checked By Consultant
EM CHIRWA — Name — 20020003 Professional Registration No.
Signature — 07-08-2023 Date

Consultant
MOLEMO CONSULTING ENGINEERS
BLOCK E
73 VILLIERS DRIVE
CLARENDON
PIETERMARITZBURG, 4700.
CELL: 082 714 4400
Email: admin@molemo.co.za
P.O. BOX 995
PIETERMARITZBURG
3200
TEL: 033 342 7953
TEL: 033 345 2288

Discipline: CIVIL AND STRUCTURAL

idt independent development trust
BROADCAST HOUSE, SISSON STREET
FORT GALE
PRIVATE BAG X5275
UMTATA, 5100.

Project
DEPARTMENT OF EDUCATION
EASTERN CAPE PROVINCE
CONSTRUCTION OF
SIVE MALUTI SPECIAL SCHOOL
PHASE 3 CEDARVILLE

Drawing Description
PHASE 3 CEDARVILLE
SEWER MANHOLE DETAILS
TYPE 1 AND TYPE 2
STANDARD DETAIL

Drawn: A. SWENDU — Date: 14-07-2023
Scale: AS SHOWN — Sheet Size: A0
Consultant Drawing Number: IDT-EC-SM-PH3-C304 — Revision: T
DOW Drawing Number: IDT-EC-SM-PH3-C304 — Revision: T
Stamped by Plans Approval Committee

IDT-EC-SM-PH3-C304 REV. T